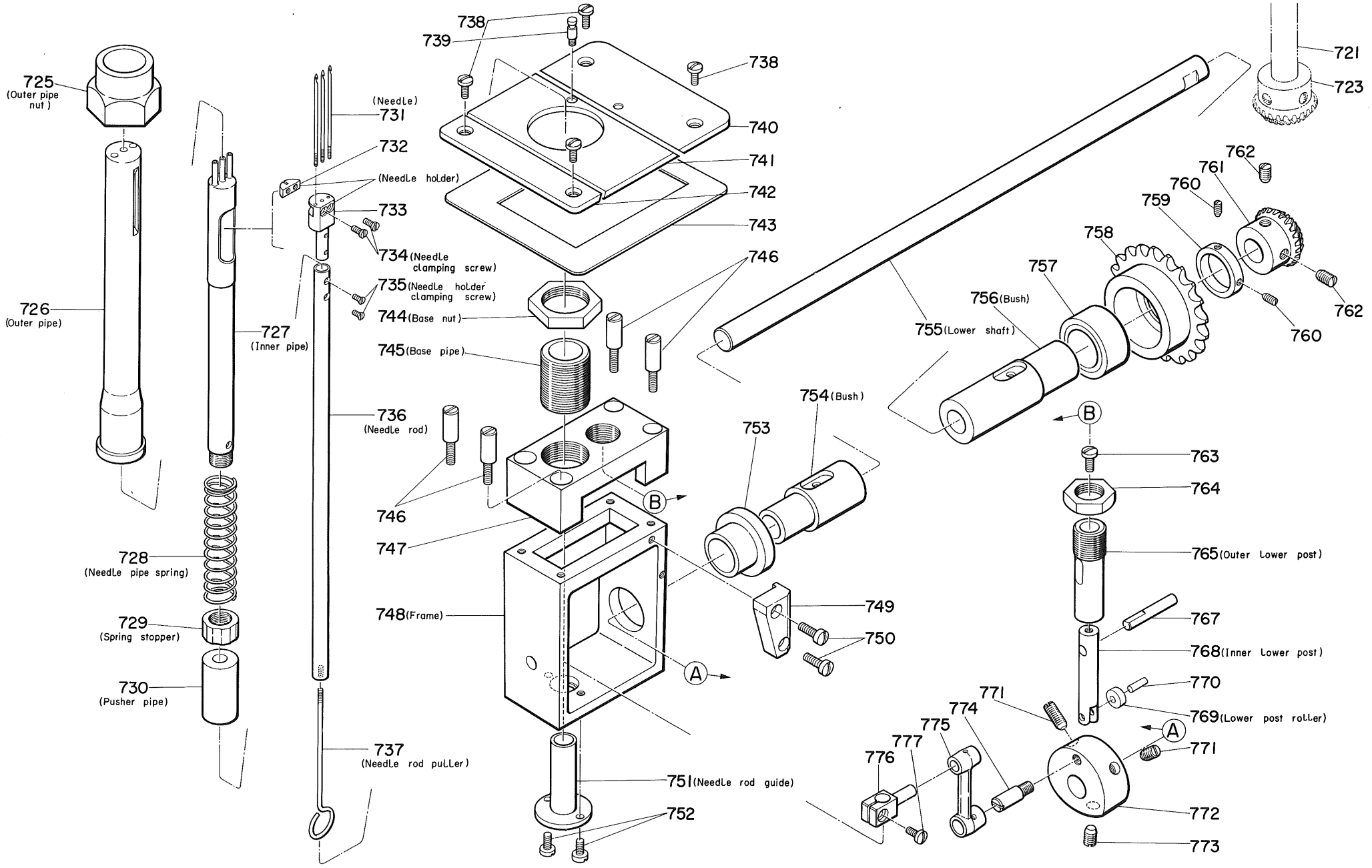DW-600 PARTS LIST No.2 (No.725 ~ No.777)